SECTION RAX
REAR AXLE

CONTENTS

2WD

PREPARATION **2**
Special Service Tools [SST] 2
Commercial Service Tools 3
NOISE, VIBRATION AND HARSHNESS (NVH) TROUBLESHOOTING **4**
NVH Troubleshooting Chart 4
WHEEL HUB **5**
On-Vehicle Inspection and Service 5
WHEEL BEARING INSPECTION 5
Removal and Installation 5
COMPONENT 5
REMOVAL 5
INSPECTION AFTER REMOVAL 6
INSTALLATION 6
Disassembly and Assembly 7
DISASSEMBLY 7
INSPECTION AFTER DISASSEMBLY 8
ASSEMBLY 8
INSPECTION AFTER ASSEMBLY 9
SERVICE DATA AND SPECIFICATIONS (SDS) **10**
Wheel Bearing 10

AWD

PRECAUTIONS **11**
Caution 11
PREPARATION **12**
Special Service Tools [SST] 12
Commercial Service Tools 13
NOISE, VIBRATION AND HARSHNESS (NVH) TROUBLESHOOTING **14**
NVH Troubleshooting Chart 14
WHEEL HUB **15**
On-Vehicle Inspection and Service 15
WHEEL BEARING INSPECTION 15
Removal and Installation 15
COMPONENT 15
REMOVAL 15
INSPECTION AFTER REMOVAL 17
INSTALLATION 18
Disassembly and Assembly 18
DISASSEMBLY 18
INSPECTION AFTER DISASSEMBLY 19
ASSEMBLY 19
INSPECTION AFTER ASSEMBLY 20
REAR DRIVE SHAFT **21**
Removal and Installation 21
COMPONENT 21
REMOVAL 21
INSPECTION AFTER REMOVAL 21
INSTALLATION 22
Disassembly and Assembly 22
COMPONENT 22
DISASSEMBLY 22
INSPECTION AFTER DISASSEMBLY 24
ASSEMBLY 24
SERVICE DATA AND SPECIFICATIONS (SDS) **27**
Wheel Bearing 27
Drive Shaft 27

PREPARATION

PFP:00002

Special Service Tools [SST]

ADS0015E

Tool number (Kent-Moore No.) Tool name	Description
ST36230000 (J-25840-A) Sliding hammer 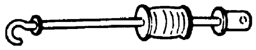 ZZA0803D	Removing wheel hub
KV40104100 (–) Attachment 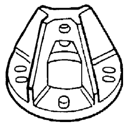 ZZA0804D	Removing wheel hub
ST33061000 (J-8107-2) Drift a: 28.5 mm (1.122 in) dia. b: 38.0 mm (1.496 in) dia. 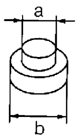 ZZA0969D	Removing wheel bearing outer side inner race
ST15242000 (–) Drift a: 47.7 mm (1.878 in) dia. b: 69 mm (2.72 in) dia. 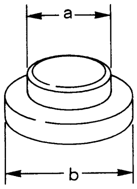 ZZA0881D	Removing wheel bearing
KV40105310 (–) Drift a: 75 mm (2.95 in) dia. b: 62 mm (2.44 in) dia. 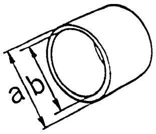 ZZA1003D	● Removing wheel bearing ● Installing wheel hub
ST30720000 (J-25405) Drift a: 77 mm (3.03 in) dia. b: 55.5 mm (2.185 in) dia. 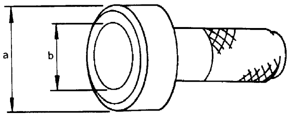 ZZA0811D	Installing wheel bearing
ST33200000 (J-26082) Drift a: 60 mm (2.36 in) dia. b: 44.5 mm (1.752 in) dia. 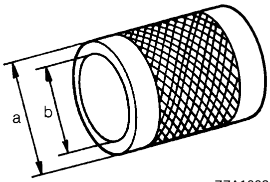 ZZA1002D	Installing wheel hub

Commercial Service Tools

ADS0016X

Tool name		Description
Power tool	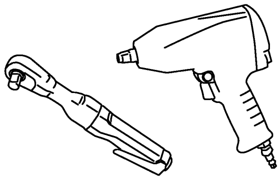 PBIC0190E	• Removing wheel nuts • Removing torque member fixing bolts

NOISE, VIBRATION AND HARSHNESS (NVH) TROUBLESHOOTING

PFP:00003

NVH Troubleshooting Chart

ADS0015F

Use chart below to help you find the cause of the symptom. If necessary, repair or replace these parts.

Reference page			RAX-5	—	NVH in RAX and RSU sections	NVH in WT section	NVH in WT section	
Possible cause and Suspected parts			Improper installation, looseness	Parts interference	REAR AXLE AND REAR SUSPENSION	TIRES	ROAD WHEELS	BRAKES
Symptom	Rear axle	Noise	×	×	×	×	×	×
		Shake	×	×	×	×	×	×
		Vibration	×	×	×	×		
		Shimmy	×	×	×	×	×	×
		Judder	×		×	×	×	×
		Poor quality ride or handling	×	×	×	×	×	

×: Applicable

WHEEL HUB

PFP:43202

On-Vehicle Inspection and Service

ADS0015G

Make sure that the mounting conditions (looseness, backlash) of each of the components and the component conditions (wear, damage) are normal.

WHEEL BEARING INSPECTION

- Move wheel hub in the axial direction by hand. Make sure there is no looseness of wheel bearing.

  Axial end play : 0.05 mm (0.002 in) or less

- Rotate wheel hub and make sure that is no unusual noise or other irregular conditions. If there is any of irregular conditions, replace wheel bearing.

A B C RAX E F G H I J K L M

Removal and Installation

ADS0015H

COMPONENT

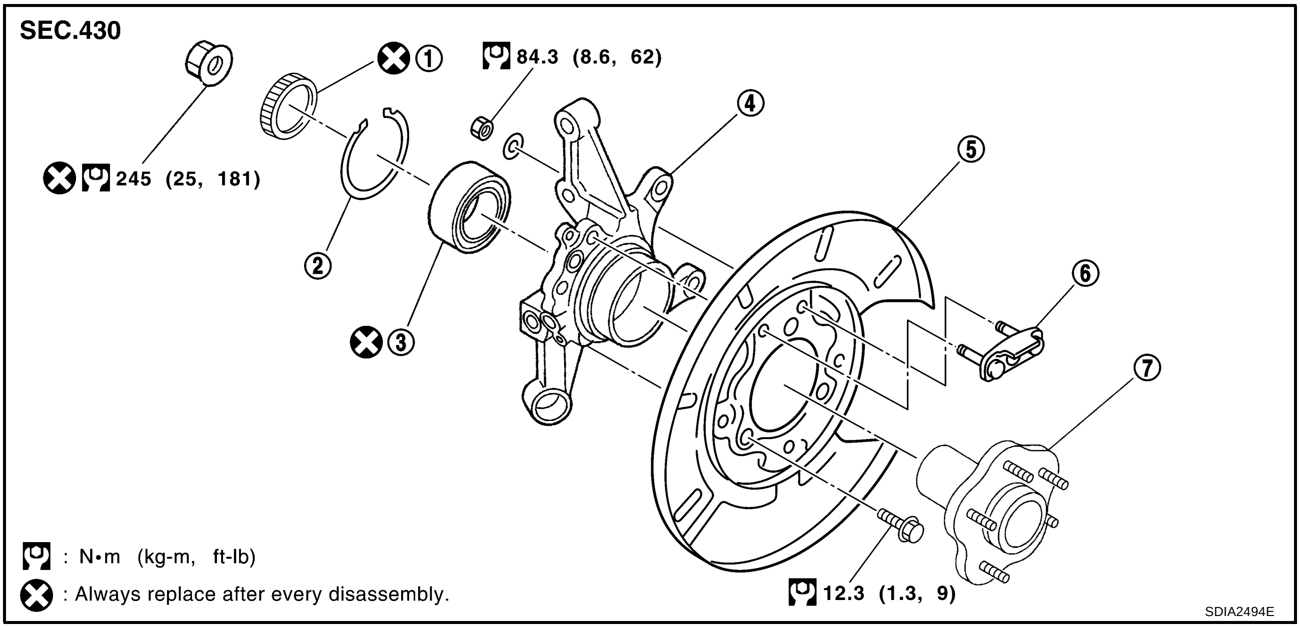

1.	Sensor rotor	2.	Snap ring	3.	Wheel bearing
4.	Axle housing	5.	Back plate	6.	Anchor block
7.	Wheel hub				

REMOVAL

1. Remove tires from vehicle with a power tool.
2. Remove wheel sensor from axle housing. Refer to BRC-36, "WHEEL SENSORS" .

   CAUTION:
   Do not pull on wheel sensor harness.
3. Remove torque member fixing bolts with a power tool. Hang torque member in a place where it will not interfere with work. Refer to BR-25, "FRONT DISC BRAKE" .

   NOTE:
   Avoid depressing brake pedal while brake caliper is removed.

4. Put matching mark on disc rotor and wheel hub, then remove disc rotor.
5. Remove parking brake shoe and parking brake cable from back plate. Refer to BR-31, "REAR DISC BRAKE" .

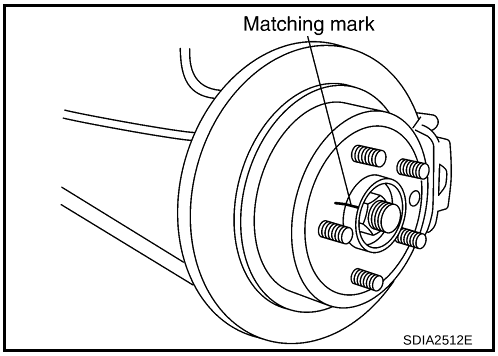

6. Remove fixing bolts and nuts, and then remove axle housing from strut assembly. Refer to RSU-7, "Component" .

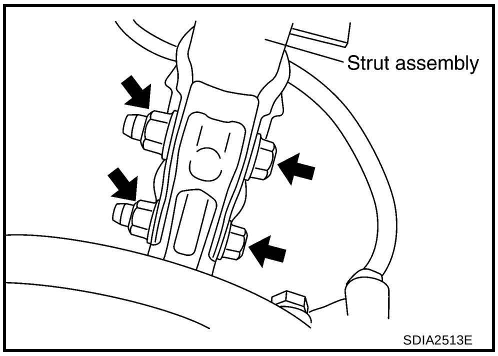

7. Remove fixing nut and bolt of axle housing side of radius rod, and then remove radius rod from axle housing. Refer to RSU-7, "Component" .

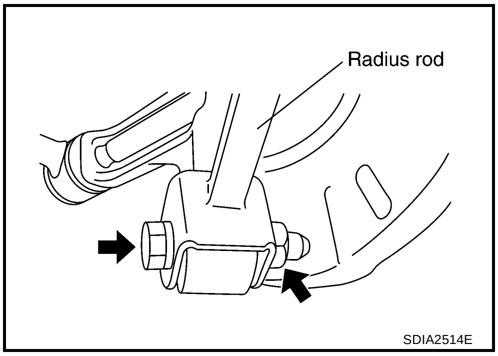

8. Remove fixing bolt, washer and nut of axle housing side of front and rear parallel links, and then remove front and rear parallel links from axle housing.
9. Remove axle housing from vehicle.

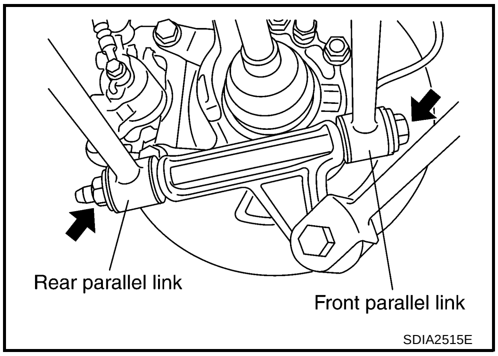

INSPECTION AFTER REMOVAL

Check the components for deformation, cracks and other damage. Replace if there.

INSTALLATION

- Install in the reverse order of the removal. For tightening torque, refer to RAX-5, "COMPONENT" .

  NOTE:
  Do not reuse non-reusable parts.
- Perform the final tightening of each of parts, under unladen condition, which were removed when removing wheel hub and axle housing. Check the wheel alignment. Refer to RSU-5, "Wheel Alignment Inspection" .

- Adjust neutral position of steering angle sensor after the checking wheel alignment for model with VDC. Refer to BRC-43, "Adjustment of Steering Angle Sensor Neutral Position" .
- Check wheel sensor harness for proper connection. Refer to BRC-36, "WHEEL SENSORS" .
- Assembly disc rotor and wheel hub by aligning each matching mark as shown in the figure when installing disc rotor.

  NOTE:

  Refer to BR-31, "REAR DISC BRAKE" for assembly when removing disc rotor without matching mark.

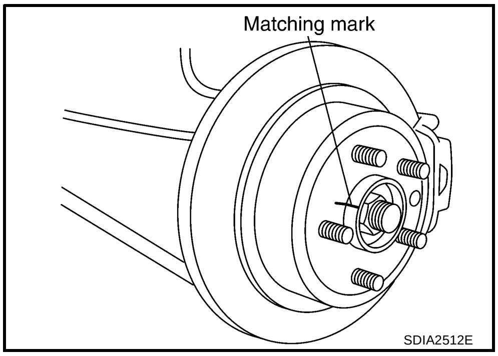

Disassembly and Assembly

ADS0015I

DISASSEMBLY

CAUTION:

Do not disassemble if wheel bearing has no malfunction.

1. Remove hub lock nut from axle housing.
2. Remove sensor rotor from axle housing.
3. Set axle housing on a vise at point where strut is attached. Use the sliding hammer [SST] and the attachment [SST] to remove wheel hub from axle housing.

   CAUTION:

   When placing on a vise, be careful not to damage strut mounting surface of axle housing. Use an aluminum plate or a suitable tool.

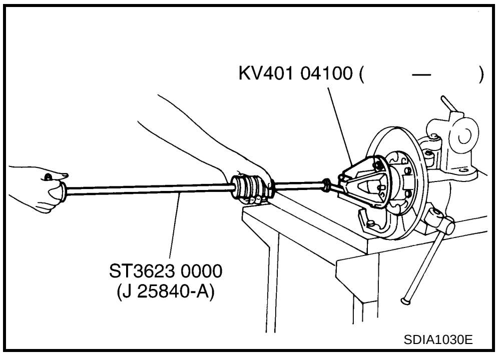

4. Remove anchor block mounting nuts and washers, then remove anchor block from axle housing.
5. Remove fixing bolt of back plate, and then remove back plate from axle housing.
6. Press wheel hub using the drift [SST] and a puller (suitable tool). Then remove wheel bearing outer side inner race from wheel hub.
7. Remove snap ring from axle housing using a flat-bladed screw-driver or similar tool.

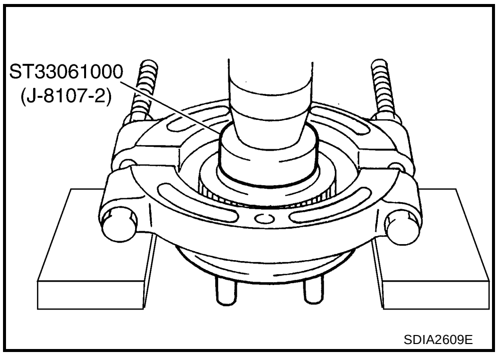

8. Press wheel bearing using the drift [SST]. Then remove it from axle housing.

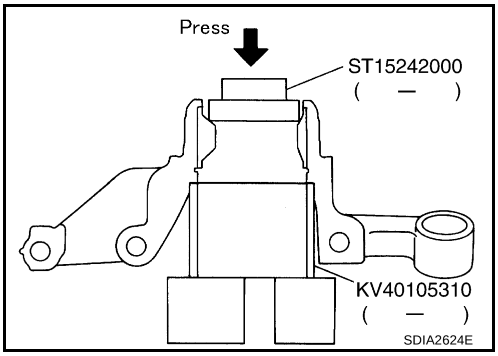

INSPECTION AFTER DISASSEMBLY

Wheel Hub

Check wheel hub for deformation, cracks, and other damage. If any irregular conditions are found, replace wheel hub.

Axle Housing

Check axle housing for deformation, cracks, and other damage. If any irregular conditions are found, replace axle housing.

Snap Ring

Check snap ring for wear or other damage. If any irregular conditions are found, replace snap ring.

Back Plate

Check back plate for deformation, cracks, and other damage. If any irregular conditions are found, replace back plate.

ASSEMBLY

1. Using the drift [SST], press wheel bearing securely onto axle housing as far as it will go.

   NOTE:
   - Do not reuse wheel bearing.
   - The final press load guideline is 49,030 N (5,000 kg, 11,025 lb).
2. Using a flat-bladed screwdriver or a similar tool, install snap ring securely to the ditch of the axle housing inner side.
3. Install back plate to axle housing.

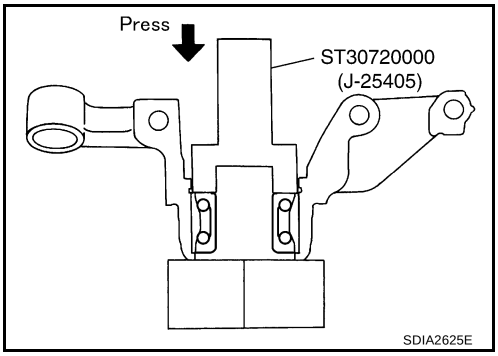

4. Using the drift [SST], press wheel hub onto axle housing.

   NOTE:
   The final press load guideline is 49,030 N (5,000 kg, 11,025 lb).
5. Set sensor rotor to axle housing.

   NOTE:
   Do not reuse sensor rotor.
6. Install hub lock nut to axle housing.

   NOTE:
   Do not reuse hub lock nut.

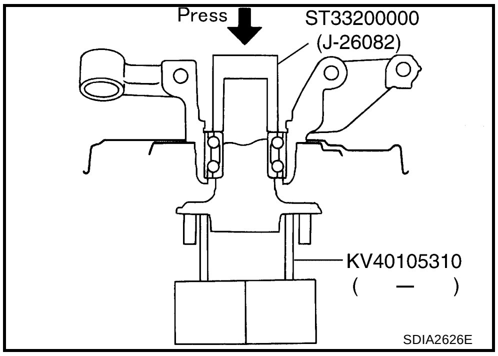

7. After installation of hub lock nut, be sure to perform clinching. Refer to figure for clinching procedure.

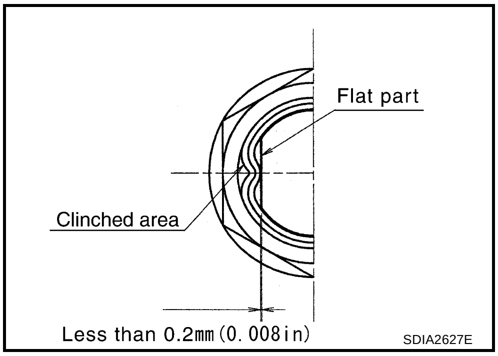

INSPECTION AFTER ASSEMBLY

1. With wheel hub pressed into wheel bearing, apply 49,030 N (5,000 kg, 11,025 lb) to wheel hub and rotate both clockwise and counterclockwise 10 times to minimize resistance.
2. Attach spring balance in the position shown in the figure and pull at a rate of 10±2 rpm to measure rotating torque.

   Rotating torque
   : Less than 1.96 N·m (0.20 kg-m, 17 in-lb)
   Spring balance reading
   : Less than 12.8 N (1.30 kg, 2.87 lb)

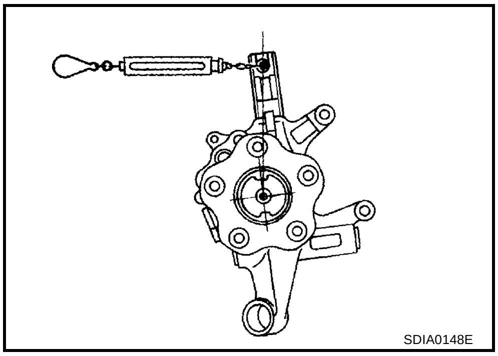

SERVICE DATA AND SPECIFICATIONS (SDS)

PFP:00030

Wheel Bearing

ADS0015O

Axial end play	0.05 mm (0.002 in) or less
Rotating torque	Less than 1.96 N·m (0.20 kg-m, 17 in-lb)
Spring balance reading	Less than 12.8 N (1.30 kg, 2.87 lb)
Measuring point	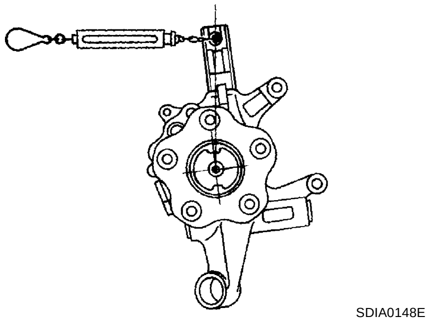

PRECAUTIONS

PFP:00001

Caution

ADS0016M

Observe the following precautions when disassembling and assembling drive shaft.

- Joint sub-assembly does not disassemble because it is non-overhaul parts.
- Perform work in a location which is as dust-free as possible.
- Before disassembling and assembling, clean the outside of parts.
- Prevention of the entry of foreign objects must be taken into account during disassembling and assembling of the service location.
- Disassembled parts must be carefully reassembled in the correct order. If work is interrupted, a clean cover must be placed over parts.
- Paper shop cloths must be used. Fabric shop cloths must not be used because of danger of lint adhering to parts.
- Disassembled parts (except for rubber parts) should be cleaned with kerosene which shall be removed by blowing with air or wiping with paper shop cloths.

PREPARATION

PFP:00002

Special Service Tools [SST]

ADS0016N

Tool number (Kent-Moore No.) Tool name		Description
ST36230000 (J-25840-A) Sliding hammer	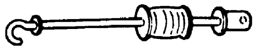 ZZA0803D	Removing wheel hub
KV40104100 (–) Attachment	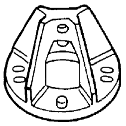 ZZA0804D	Removing wheel hub
ST15242000 (–) Drift a: 47.7 mm (1.878 in) dia. b: 69 mm (2.72 in) dia.	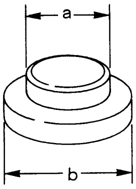 ZZA0881D	Removing wheel bearing
KV40105310 (–) Drift a: 75 mm (2.95 in) dia. b: 62 mm (2.44 in) dia.	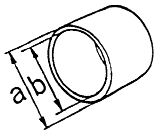 ZZA1003D	● Removing wheel bearing ● Installing wheel hub
ST30720000 (J-25405) Drift a: 77 mm (3.03 in) dia. b: 55.5 mm (2.185 in) dia.	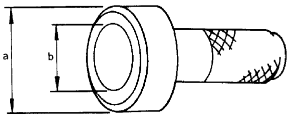 ZZA0811D	Installing wheel bearing
ST33200000 (J-26082) Drift a: 60 mm (2.36 in) dia. b: 44.5 mm (1.752 in) dia.	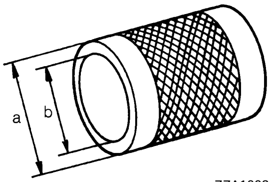 ZZA1002D	Installing wheel hub
KV38107800 (–) Protector a: 29 mm (1.41 in) dia.	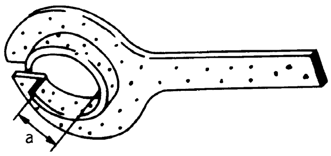 ZZA0835D	Installing drive shaft

Tool number (Kent-Moore No.) Tool name		Description
KV38100500 (–) Drift a: 80 mm (3.15 in) dia. b: 60 mm (2.36 in) dia.	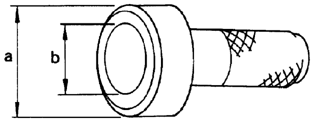 ZZA0701D	Installing sensor rotor
KV40101840 (–) Drift a: 67 mm (2.64 in) dia. b: 85 mm (3.35 in) dia.	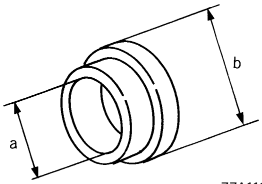 ZZA1113D	Installing sensor rotor

Commercial Service Tools

ADS0016Y

Tool name		Description
Power tool	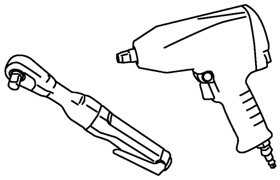 PBIC0190E	● Removing wheel nuts ● Removing torque member fixing bolts

NOISE, VIBRATION AND HARSHNESS (NVH) TROUBLESHOOTING

PFP:00003

NVH Troubleshooting Chart

ADS0016O

Use chart below to help you find the cause of the symptom. If necessary, repair or replace these parts.

Reference page			—	RAX-24	—	RAX-15	—	NVH in PR section	NVH in RFD section	NVH in RAX and RSU sections	Refer to Rear axle in this chart	NVH in WT section	NVH in WT section	Refer to DRIVE SHAFT in this chart	NVH in BR section	NVH in PS section
Possible cause and Suspected			Excessive joint angle	Joint sliding resistance	Imbalance	Improper installation, looseness	Parts interference	PROPELLER SHAFT	DIFFERENTIAL	REAR AXLE AND REAR SUSPENSION	REAR AXLE	TIRES	ROAD WHEELS	DRIVE SHAFT	BRAKES	STEERING
Symptom	DRIVE SHAFT	Noise	×	×				×	×	×	×	×	×		×	×
		Shake	×		×			×		×	×	×	×		×	×
	REAR AXLE	Noise				×	×	×	×	×		×	×	×	×	×
		Shake				×	×	×		×		×	×	×	×	×
		Vibration				×	×	×		×		×		×		×
		Shimmy				×	×			×		×	×		×	×
		Judder				×				×		×	×		×	×
		Poor quality ride or handling				×	×			×		×	×			

×: Applicable

WHEEL HUB

PFP:43202

On-Vehicle Inspection and Service

ADS0016P

Make sure that the mounting conditions (looseness, backlash) of each of the components and the component conditions (wear, damage) are normal.

WHEEL BEARING INSPECTION

- Move wheel hub in the axial direction by hand. Make sure there is no looseness of wheel bearing.

  Axial end play : 0.05 mm (0.002 in) or less

- Rotate wheel hub and make sure that is no unusual noise or other irregular conditions. If there is any of irregular conditions, replace wheel bearing.

Removal and Installation

ADS0016Q

COMPONENT

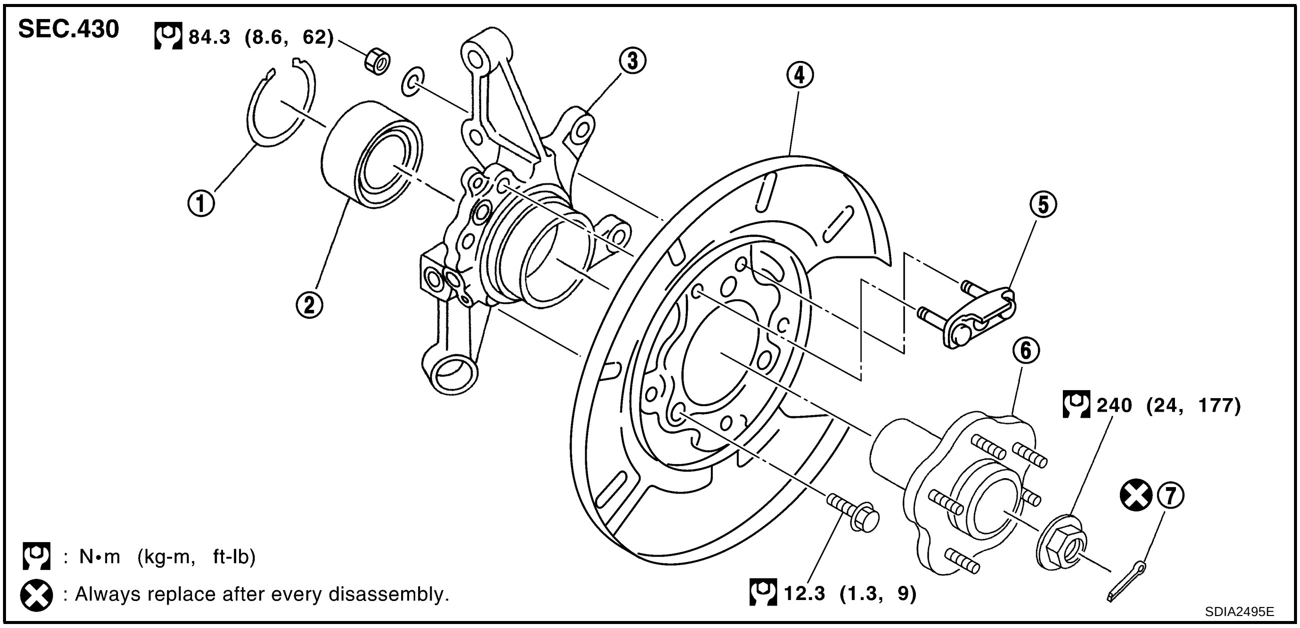

1.	Snap ring	2.	Wheel bearing	3.	Axle housing
4.	Back plate	5.	Anchor block	6.	Wheel hub
7.	Cotter pin				

REMOVAL

1. Remove tires from vehicle with a power tool.
2. Remove wheel sensor from axle housing. Refer to BRC-36, "WHEEL SENSORS" .

   CAUTION:
   Do not pull on wheel sensor harness.
3. Remove torque member fixing bolts with a power tool. Hang torque member in a place where it will not interfere with work. Refer to BR-31, "REAR DISC BRAKE" .

   NOTE:
   Avoid depressing brake pedal while brake caliper is removed.

4. Put matching mark on disc rotor and wheel hub, then remove disc rotor.
5. Remove parking brake shoe and parking brake cable from back plate. Refer to BR-31, "REAR DISC BRAKE" .
6. Remove cotter pin, then loosen hub lock nut with power tool.

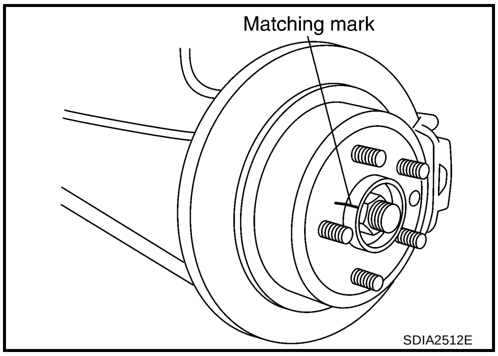

7. Separate wheel hub from drive shaft by lightly tapping the end with a hammer (suitable tool) and wood block, and then remove hub lock nut.

CAUTION:

- **Do not place drive shaft joint at an extreme angle. Also be careful not to overextend slide joint.**
- **Do not allow dive shaft to hang down without support for housing (or joint sub-assembly), shaft and other parts.**

NOTE:

Using a puller (suitable tool) if wheel hub and drive shaft cannot be separated even after performing the above procedure.

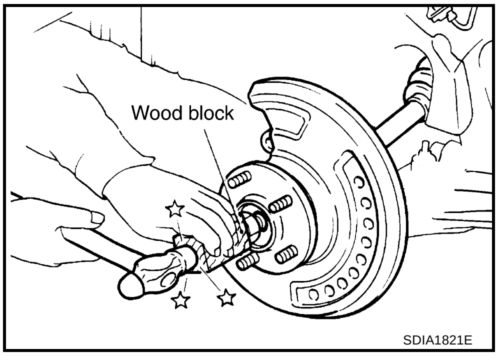

8. Remove the fixing bolts and nuts, and then remove axle housing from strut assembly. Refer to RSU-7, "Component" .
9. Remove drive shaft from axle housing.

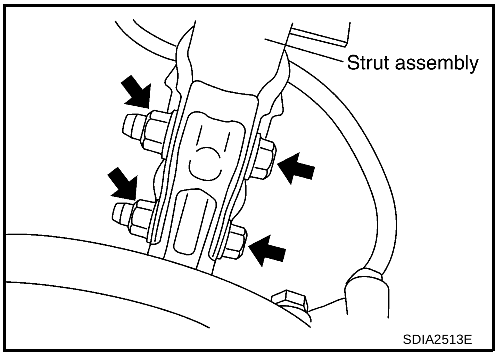

10. Remove fixing nut and bolt of axle housing side of radius rod, and then remove radius rod from axle housing. Refer to RSU-7, "Component" .

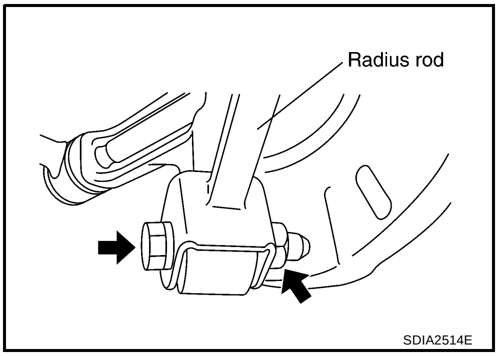

11. Remove fixing bolt, washer and nut of axle housing side of front and rear parallel links, and then remove front and rear parallel links from axle housing.
12. Remove axle housing from vehicle.

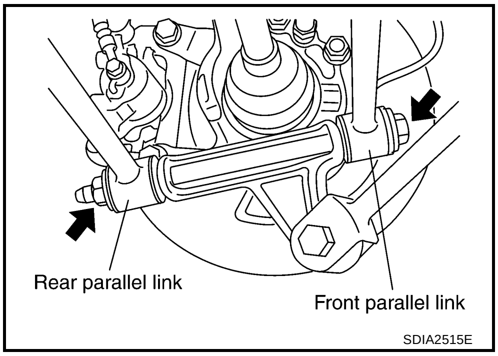

INSPECTION AFTER REMOVAL

Check components for deformation, cracks and other damage. Replace if there are.

INSTALLATION

- Install in the reverse order of the removal. For tightening torque, refer to RAX-15, "COMPONENT" .

  NOTE:

  Do not reuse non-reusable parts.
- Perform the final tightening of each of parts, under unladen conditions, which were removed when removing wheel hub and axle housing. Check the wheel alignment. Refer to RSU-18, "SERVICE DATA AND SPECIFICATIONS (SDS)" .
- Adjust neutral position of steering angle sensor after checking the wheel alignment for model with VDC. Refer to BRC-43, "Adjustment of Steering Angle Sensor Neutral Position" .
- Check wheel sensor harness for proper connection. Refer to BRC-36, "WHEEL SENSORS" .
- Assembly disc rotor and wheel hub by aligning each matching mark as shown in the figure when installing disc rotor.

  NOTE:

  Refer to BR-31, "REAR DISC BRAKE" for assembly when removing disc rotor without matching mark.

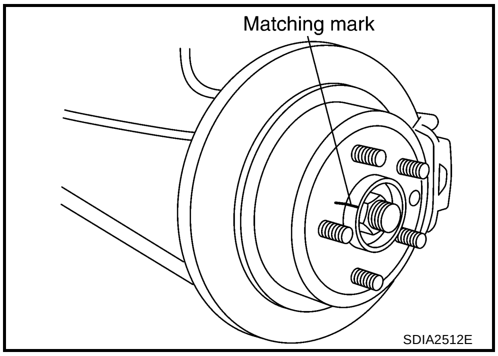

Disassembly and Assembly

ADS0016R

DISASSEMBLY

CAUTION:

Do not disassemble if wheel bearing has no malfunction.

1. Secure axle housing on a vise at the part where strut is removed. Use the sliding hammer [SST] and attachment [SST], remove wheel hub from axle housing.

   CAUTION:

   When securing the axle housing on a vise, be careful not to damage strut mounting surface of axle housing, Use an aluminum plate or a suitable tool.

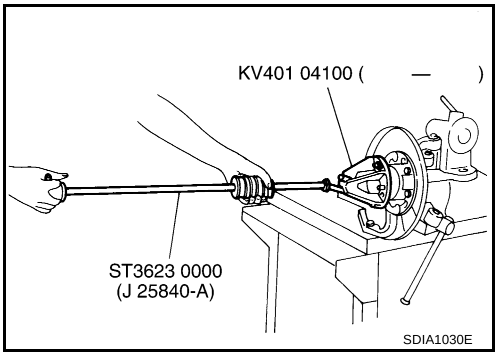

2. Remove anchor block mounting nuts and washers then remove anchor block from axle housing.
3. Remove fixing bolt of back plate, and then remove back plate from axle housing.
4. Remove snap ring from axle housing using a flat-bladed screwdriver or similar tool.
5. Press wheel bearing using the drift [SST]. Then remove it from axle housing.

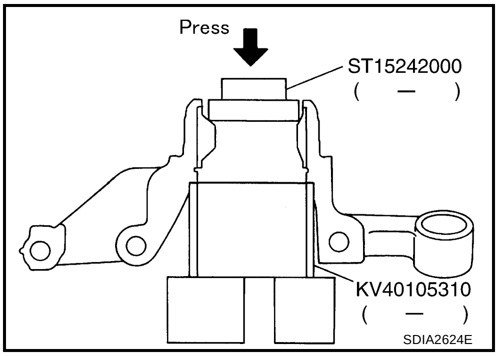

INSPECTION AFTER DISASSEMBLY

Wheel Hub

Check wheel hub for deformation, cracks, and other damage. If any irregular conditions are found, replace wheel hub.

Axle Housing

Check axle housing for deformation, cracks, and other damage. If any irregular conditions are found, replace axle housing.

Snap Ring

Check snap ring for wear or other damage. If any irregular conditions are found, replace snap ring.

Back Plate

Check back plate for deformation, cracks, and other damage. If any irregular conditions are found, replace back plate.

ASSEMBLY

1. Using the drift [SST], press wheel bearing securely onto axle housing as far as it will go.

   NOTE:
   - Do not reuse wheel bearing.
   - The final press load guideline is 49,030 N (5,000 kg, 11,025 lb).
2. Using a flat-bladed screwdriver or a similar tool, install snap ring securely to the ditch of the axle housing inner side.
3. Install back plate to axle housing.

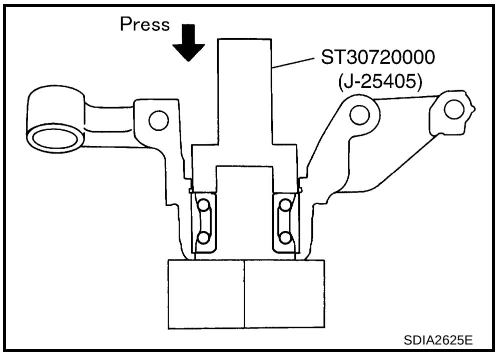

4. Using the drift [SST], press wheel hub onto axle housing.

   NOTE:
   The final press load guide line is 49,030 N (5,000 kg, 11,025 lb).

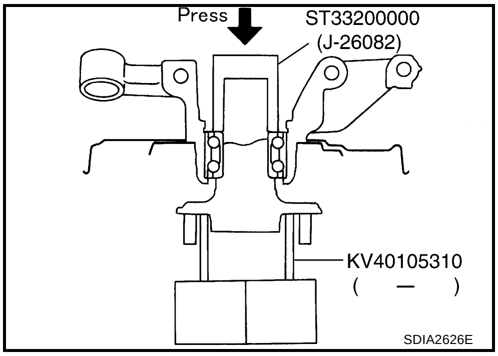

INSPECTION AFTER ASSEMBLY

1. With wheel hub pressed into wheel bearing, apply 49,030 N (5,000 kg, 11,025 lb) to wheel hub and rotate both clockwise and counterclockwise 10 times to minimize resistance.
2. Attach spring balance in the position shown in the figure and pull at a rate of 10±2 rpm to measure rotating torque.

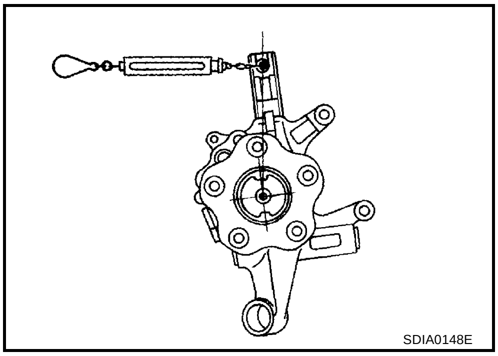

Rotating torque
: Less than 1.96 N·m (0.20 kg-m, 17 in-lb)

Spring balance reading
: Less than 12.8 N (1.30 kg, 2.87 lb)

REAR DRIVE SHAFT

PFP:39600

Removal and Installation

ADS0016S

COMPONENT

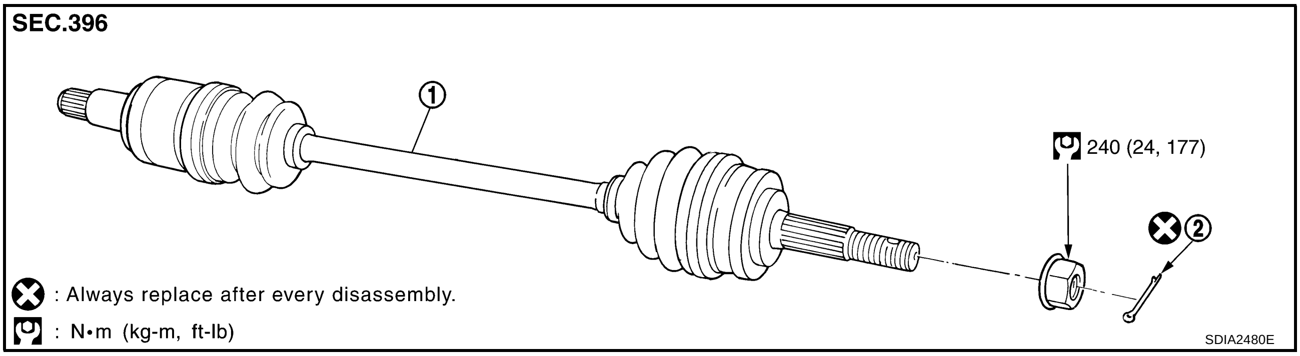

1. Drive shaft
2. Cotter pin

REMOVAL

1. Remove axle housing. Refer to RAX-15, "Removal and Installation" .

   NOTE:

   In order to remove drive shaft, axle housing is removed. At this time it is recommended that front and rear parallel links on axle side be loosened (not removed). This will facilitate wheel alignment inspection and adjustment which are performed later.

2. Remove drive shaft from rear final drive using a flat-bladed screwdriver as shown in the figure.

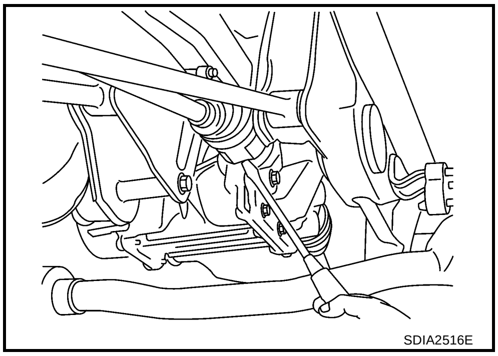

INSPECTION AFTER REMOVAL

- Move joint up/down, left/right, and in the axial direction. Check for motion that is not smooth and for significant looseness.
- Check boot for cracks, damage, and leakage of grease.
- Disassemble drive shaft and exchange malfunctioning part if there is non-standard condition.

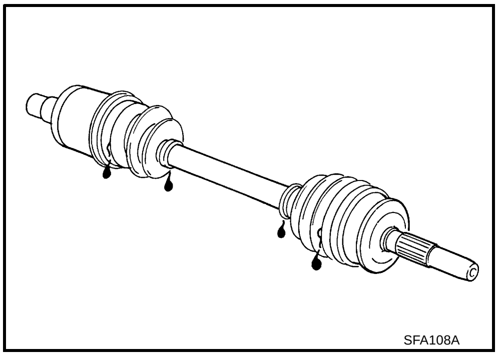

INSTALLATION

- Install in the reverse order of the removal. For tightening torque, refer to RAX-21, "COMPONENT"

  NOTE:

  Do not reuse non-reusable parts.
- Place the protector [SST] onto rear final drive to prevent damage to the side oil seal while inserting drive shaft. Slide drive shaft sliding joint and tap with a hammer to install securely.

  CAUTION:

  Make sure that circular clip is completely engaged.

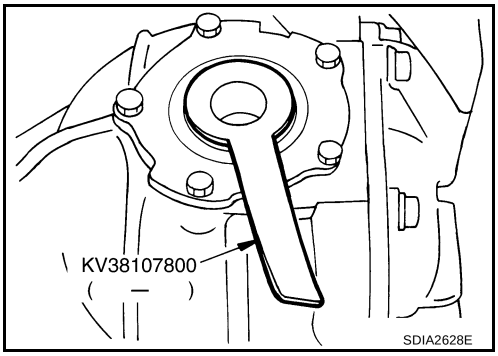

Disassembly and Assembly

ADS0016T

COMPONENT

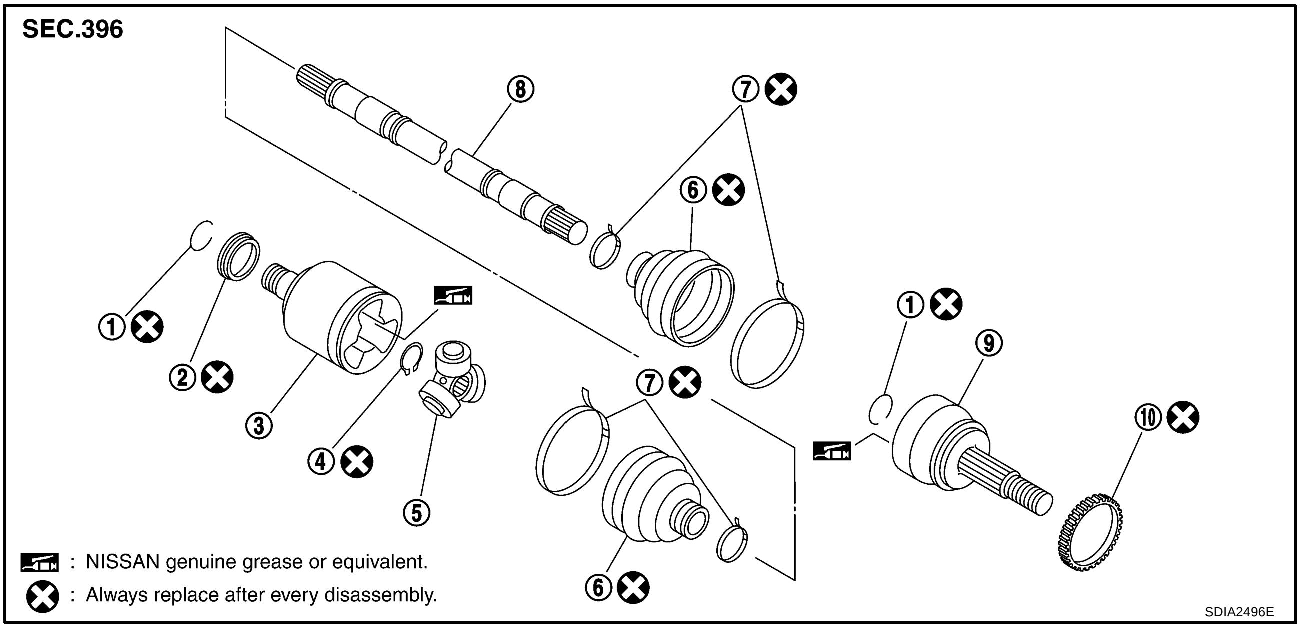

1.	Circular clip	2.	Dust cover	3.	Housing
4.	Snap ring	5.	Spider assembly	6.	Boot
7.	Boot band	8.	Shaft	9.	Joint sub-assembly
10.	Sensor rotor				

DISASSEMBLY

Final Drive Side

1. Secure shaft in a vise.

   CAUTION:

   Protect shaft when securing in a vise using aluminum or copper plates.
2. Remove boot bands, and then remove boot from housing.
3. Put matching marks onto housing and shaft, and then pull out housing from shaft.

   CAUTION:

   Use paint or similar substance for matching marks. Do not scratch the surface.

4. Put matching marks onto the shaft and spider assembly.

   CAUTION:

   Use paint or similar substance for matching marks. Do not scratch the surfaces.

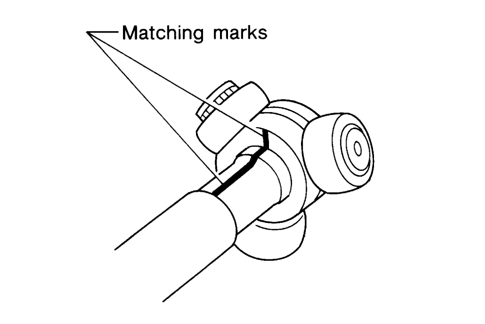

SFA963

5. Remove snap ring. Remove spider assembly from the shaft.
6. Remove boot from the shaft.
7. Remove circular clip and dust cover from housing.
8. Clean old grease on housing with paper towels.

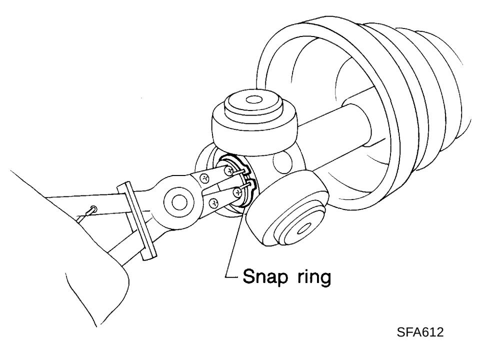

SFA612

Wheel Side

1. As shown in the figure, remove sensor rotor from drive shaft using a bearing replacer (suitable tool) and puller (suitable tool).
2. Secure shaft in a vise.

   CAUTION:

   Protect shaft when securing in a vise using aluminum or copper plates.
3. Remove boot bands, and then remove boot from joint sub-assembly.

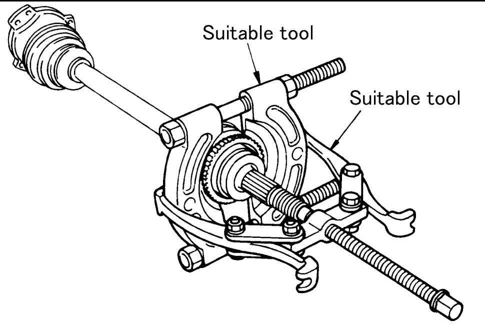

SDIA0595E

4. Screw a drive shaft puller (suitable tool) 30 mm (1.18 in) or more onto the thread on joint sub-assembly, and pull joint sub-assembly out of shaft.

   CAUTION:

   - **Replace entire drive shaft assembly if joint sub-assembly cannot be removed after five or more unsuccessful attempts.**
   - **Align sliding hammer and drive shaft and remove them by pulling firmly and uniformly.**
5. Remove boot from shaft.
6. Remove circular clip from shaft.
7. Clean old grease on joint sub-assembly with paper towels while rotating ball cage.

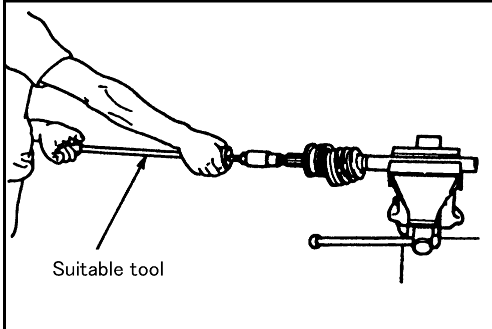

SDIA0606E

INSPECTION AFTER DISASSEMBLY

Shaft

Check shaft for runout, cracks, or other damage. Replace if there are.

Joint Sub-Assembly (Wheel Side)

Check the following:

- Joint sub-assembly for rough rotation and excessive axial looseness.
- Inside the joint sub-assembly for entry of foreign material.
- Joint sub-assembly for compression scars, cracks, and fractures inside of joint sub-assembly.

Replace joint sub-assembly if there are any non-standard conditions.

Housing and Spider Assembly (Final Drive Side)

- Replace housing and spider assembly if there is scratching or wear of housing roller contact surface or spider roller contact surface.

  NOTE:
  Housing and spider assembly are used in a set.

ASSEMBLY

Final Drive Side

1. Wrap serration on shaft with tape to protect boot from damage. Install new boot and boot bands to shaft.

   NOTE:
   Do not reuse boot bands and boot.
2. Remove the tape wrapped around the serration on shaft.

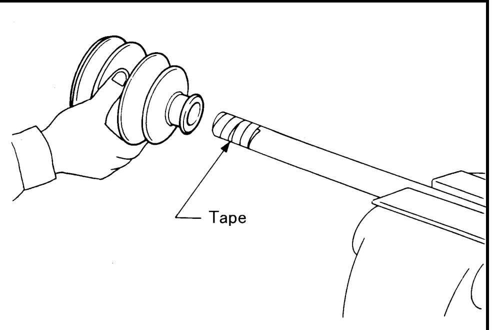

SDIA0597E

3. Align matching marks painted when spider assembly was removed. Install spider assembly with chamfer facing shaft.

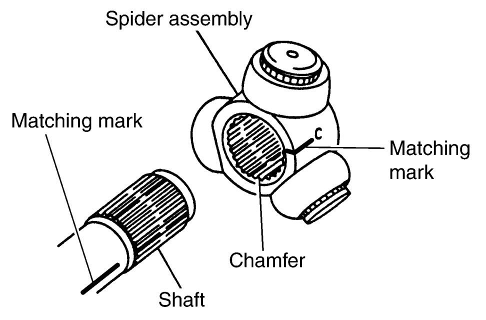

SDIA2629E

4. Secure spider assembly onto shaft with snap ring.

   NOTE:
   Do not reuse snap ring.
5. Apply the specified amount of grease (NISSAN genuine grease or equivalent) onto spider assembly and sliding surface.
6. Assemble the housing onto spider assembly, and apply the specified amount of grease (NISSAN genuine grease or equivalent).

   Grease amount : 40 - 50 g (1.41 - 1.77 oz)

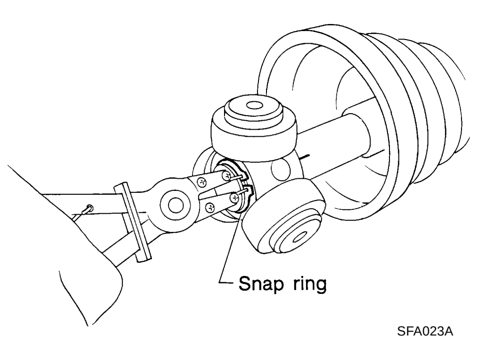

SFA023A

7. Install boot securely into grooves (indicated by * marks) shown in the figure.

   CAUTION:

   If grease adheres to the boot mounting surface (with * mark) on shaft and housing, boot may come off. Remove all grease from the surface.

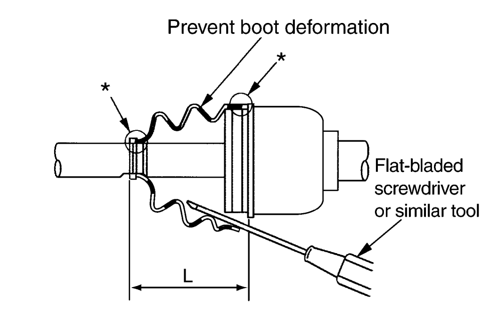

SDIA2493E

8. To prevent from deformation of the boot, adjust the boot installation length to the value shown below (L) by inserting a flat-bladed screwdriver or similar tool into the inside of boot from the large diameter side of boot and discharging inside air.

   Boot installation length (L) : 78.6 - 80.6 mm (3.094 - 3.173 in)

   CAUTION:

   - **If the boot installation length is outside the standard, it may cause breakage in boot.**
   - **Be careful not to touch the inside of the boot with a tip of a flat-bladed screwdriver.**

9. Secure the large and small ends of a boot with new boot bands as shown in the figure.

   NOTE:

   Do not reuse boot bands.

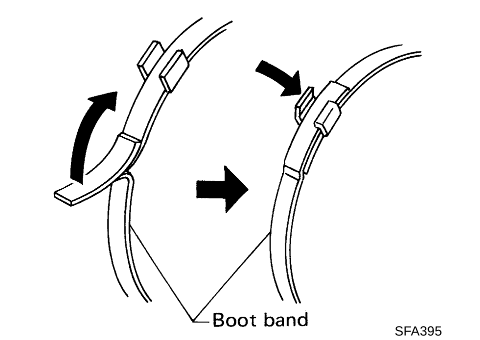

SFA395

10. Secure housing and shaft, and then make sure that they are in the correct position when rotating boot. Install them with new boot band when the mounting positions become incorrect.
11. Install circular clip and dust cover to housing.

    NOTE:

    Do not reuse circular clip and dust cover.

Wheel Side

1. Use the drift [SST] to press-fit sensor rotor into joint sub-assembly.

   NOTE:

   Do not reuse sensor rotor.

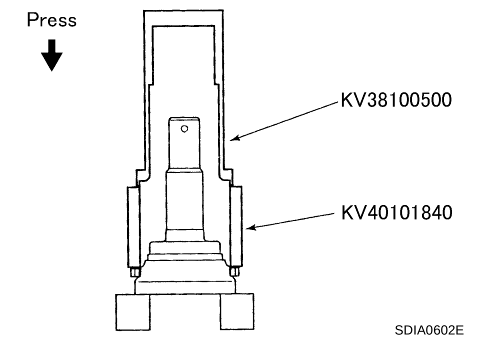

SDIA0602E

2. Insert the specified amount of grease (NISSAN genuine grease or equivalent) into joint sub-assembly serration hole until grease begins to ooze from ball groove and serration hole. After inserting grease, use a shop cloth to wipe off old grease that has oozed out.

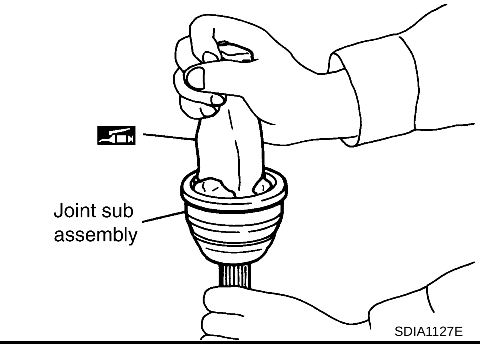

SDIA1127E

3. Wrap serration on shaft with tape to protect the boot from damage. Install new boot and boot bands to shaft.

   NOTE:
   Do not reuse boot bands and boot.
4. Remove the tape wrapped around the serration on shaft.

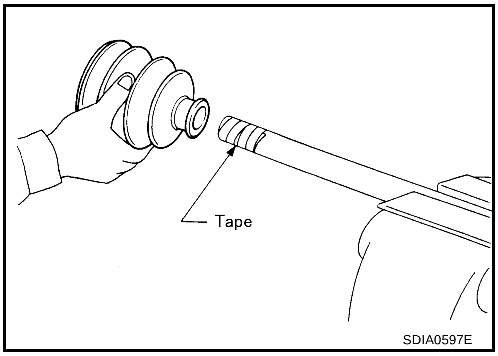

5. Attach circular clip to shaft. At this time, circular clip must fit securely into the shaft groove. Attach nut to joint sub-assembly. Use a wooden hammer to press-fit.

   NOTE:
   Do not reuse circular clip.
6. Apply the remainder of the specified amount of grease (NISSAN genuine grease or equivalent) to joint sub-assembly from large end of boot.

   Grease amount : 35 - 45 g (1.23 - 1.59 oz)

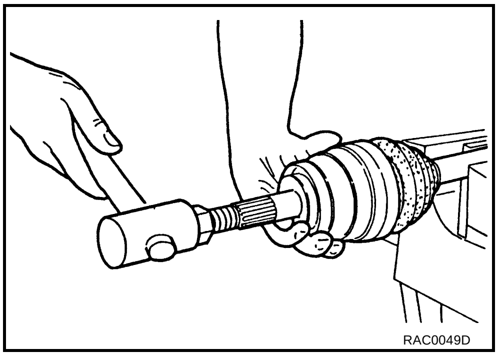

7. Install boot securely into grooves (indicated by * marks) shown in the figure.

   CAUTION:
   If grease adheres to the boot mounting surface (with * mark) on shaft and joint sub-assembly, boot may come off. Remove all grease from the surface.
8. To prevent from deformation of the boot, adjust the boot installation length to the value shown below (L) by inserting a flat-bladed screwdriver or similar tool into the inside of boot from the large diameter side of boot and discharging inside air.

   Boot installation length (L) : 66.7 - 68.7 mm (2.626 - 2.705 in)

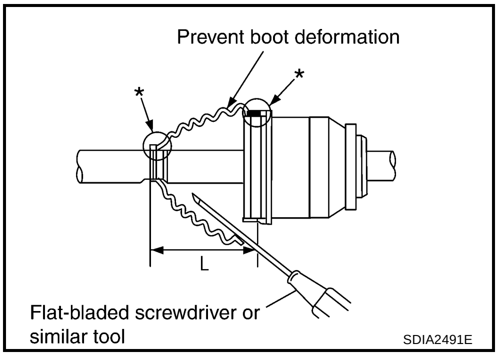

CAUTION:
- **If the boot installation length is outside the standard, it may cause breakage in boot.**
- **Be careful not to touch the inside of the boot with tip of a flat-bladed screwdriver.**

9. Secure the large and small ends of boot with new boot bands as shown in the figure.

   NOTE:
   Do not reuse boot bands.
10. Secure joint sub-assembly and shaft, and then make sure that they are in the correct position when rotating boot. Install them with new boot band when the mounting positions become incorrect.

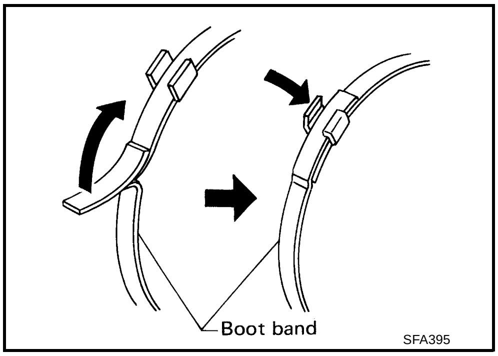

SERVICE DATA AND SPECIFICATIONS (SDS)

PFP:00030

Wheel Bearing

ADS0016U

Axial end play	0.05 mm (0.002 in) or less
Rotating torque	Less than 1.96 N·m (0.20 kg-m, 17 in-lb)
Spring balance reading	Less than 12.8 N (1.30 kg, 2.87 lb)
Measuring point	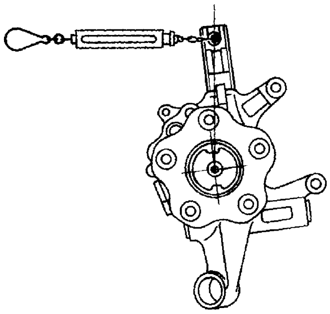 SDIA0148E

Drive Shaft

ADS0016V

Joint type	Wheel side	Final drive side
Grease quantity	35 - 45 g (1.23 - 1.59 oz)	40 - 50 g (1.41 - 1.77 oz)
Boots installation length	66.7 - 68.7 mm (2.626 - 2.705 in)	78.6 - 80.6 mm (3.094 - 3.173 in)